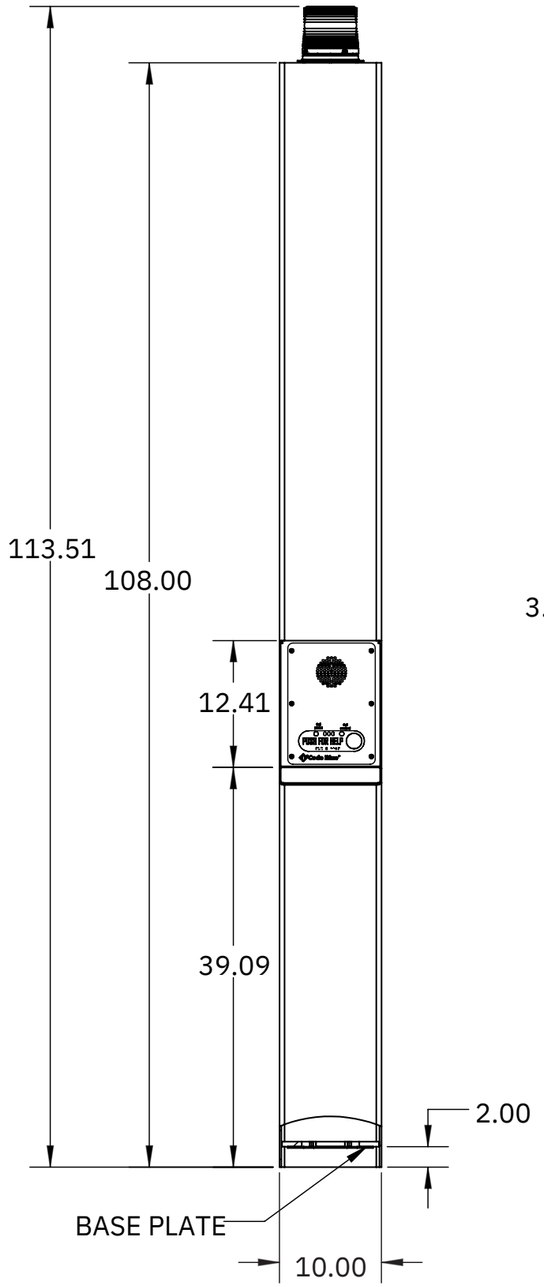

FRONT VIEW

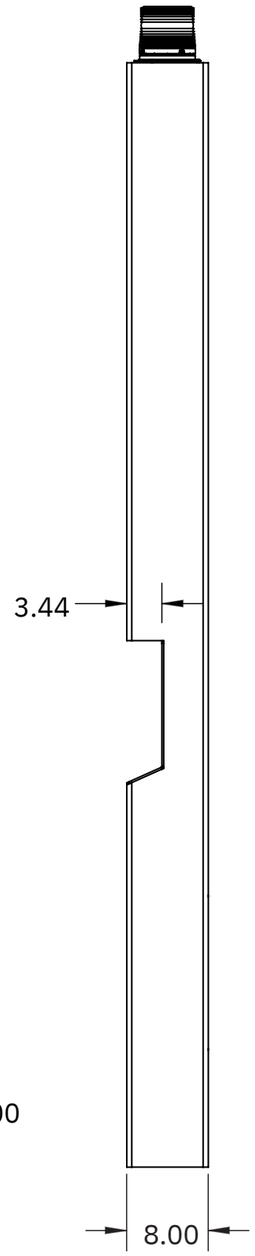

SIDE VIEW

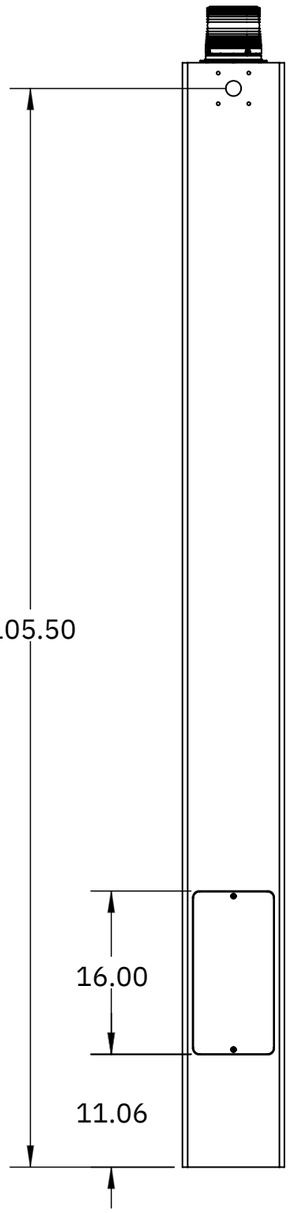

BACK VIEW

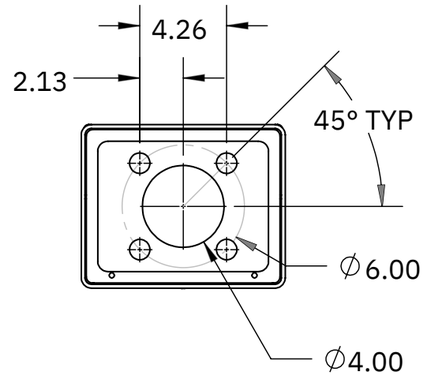

BASE PLATE DETAIL

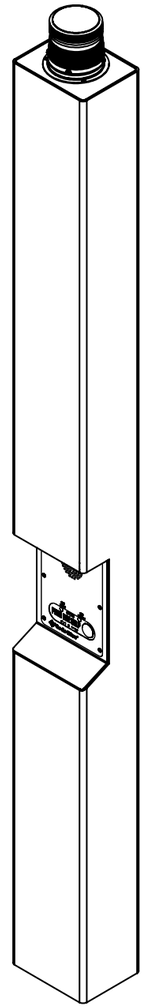

CB RT

Code Blue®

800-205-7186 | codeblue.com

© 2023 Code Blue Corporation

CAD-170-B